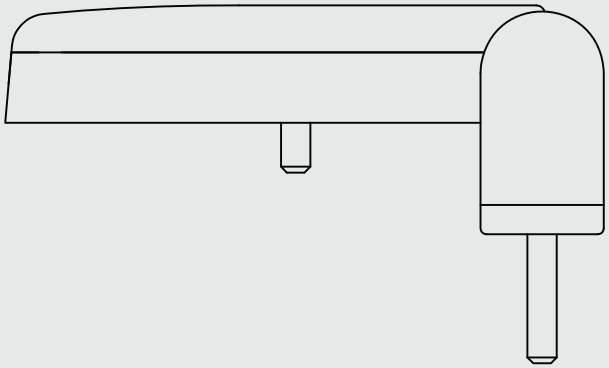

Guardian Flag Technical Information

- Fully Adjustable high security flag hinge
- Double knuckle design prevents door drop
- Zinc alloy construction
- Simple adjustment with 5mm Allen key
- Lateral adjustment ±5mm
- Vertical adjustment +4mm/-2mm
- Compression adjustment ±1mm
- 14mm and 21mm base heights
- 94mm and 102mm flag widths
- Wide range of powder coated finishes
- PVD Gold and Chrome finishes
- Easy to use fitting jigs available

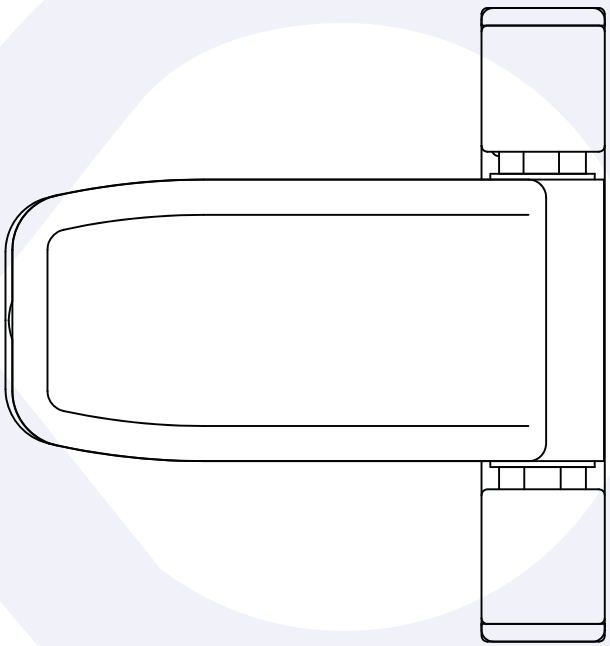

10 YEAR GUARANTEE MECHANICAL

Secured by Design SBD Police Preferred Specification

Paddock™ Innovators in hardware
PADDOCK FABRICATIONS LTD | FRYERS ROAD | BLOXWICH | WALSALL | WEST MIDLANDS | WS2 7LZ
T: 01922 711722 | F: 01922 711345 | SALES@PADDOCKFABRICATIONS.CO.UK